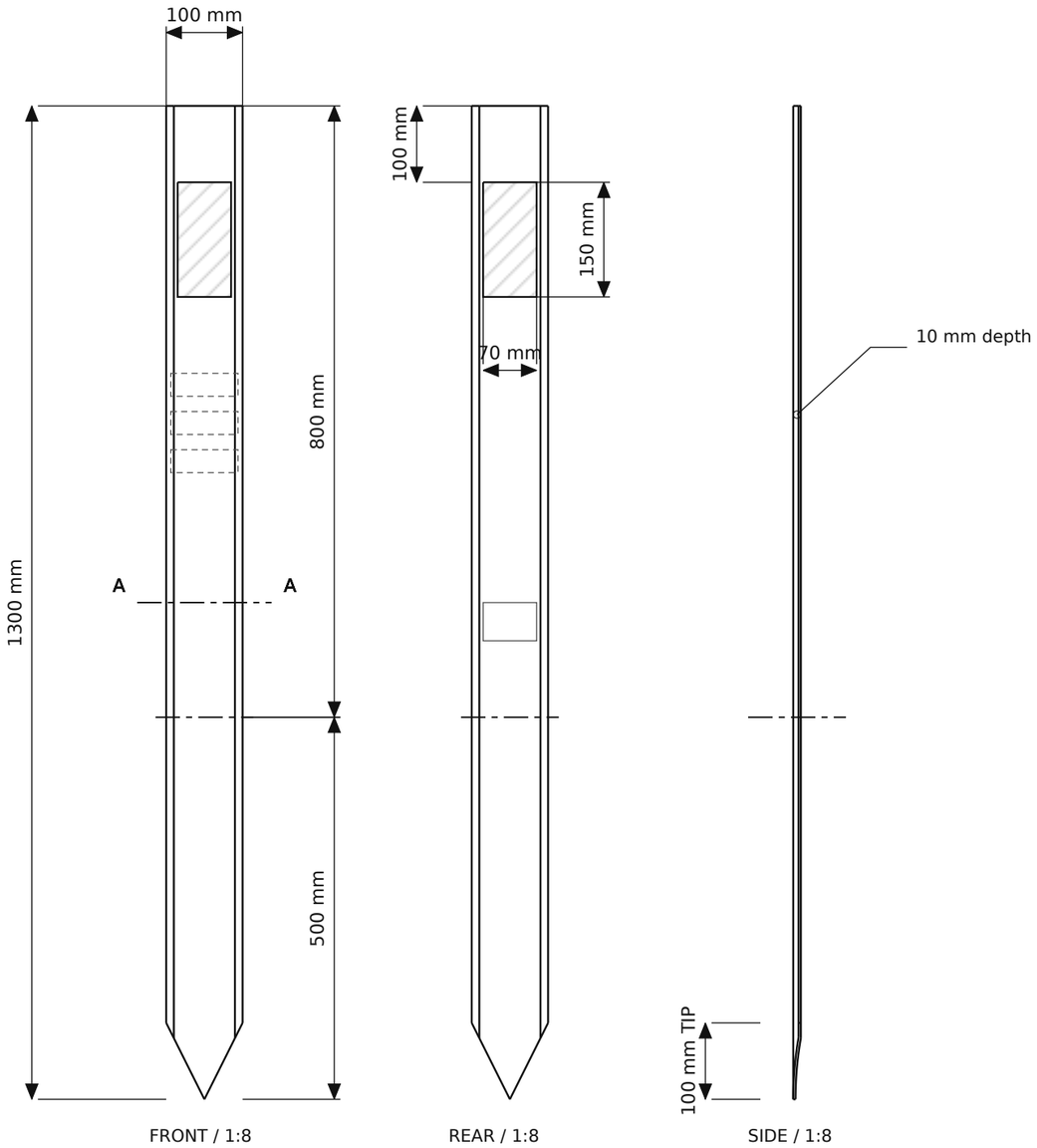

A-A / CAD SECTION / 2:1

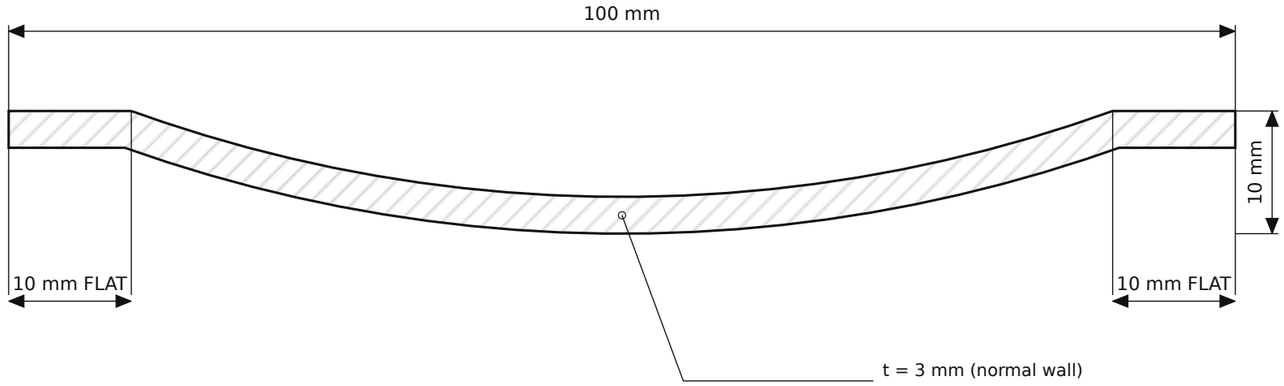

PRODUCT DIMENSIONS

Total 1300 = exposed 800 + embedded 500 mm

Section 100 x 10 mm; arc and flat wall 3 mm

Two 10 mm flat edges on the concave face

Pointed tip height 100 mm; flat upper edge

Front / rear reflector 70 x 150 mm; top margin 100 mm

Reflector side margins 15 mm; one per face

BODY: YELLOW

REFLECTORS: front red / back white

PRODUCT DETAILS

Material: GRP.

Colour variants share one contour; front concave, rear convex.

TRAFFIC INDUSTRIES
MiR GROUP
ENGINEERING MANUFACTURING INDUSTRY CONSTRUCTION TRADE

+90 532 711 2185
info@trafficindustries.com
trafficindustries.com
mirgrp.com

Macun Mah. Batı Bulvarı
ATB İş Merkezi No.192
06105 Yenimahalle · Ankara · Türkiye

GRP roadside flexible delineator post

DOC:	REV:	SCALE:	PAGE:
TI-YKD-1300-YELLOW-RW	C01 / CAD-R2	1:8 / 2:1	1/2
DATE:	**UNIT:**	**PAPER:**	**LANG:**
2026-10-03	mm	A3 / 420 x 297 mm	EN

B · POINTED LOWER END · 1:1

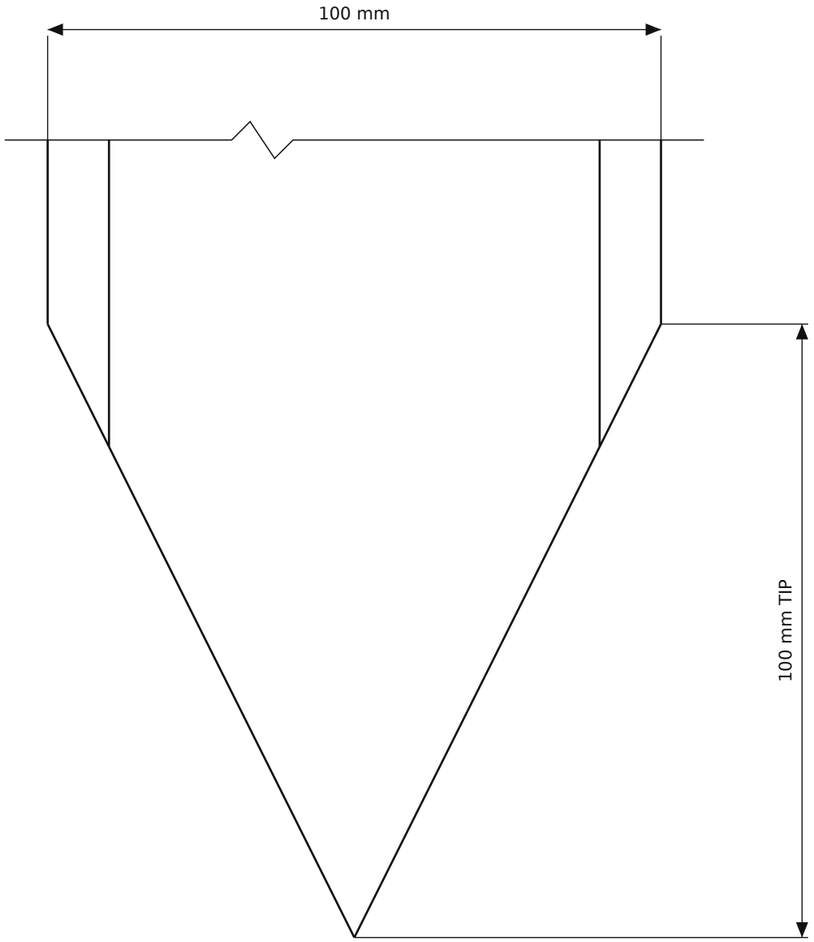

Lower 130 mm of the post

A–A · ACTUAL CAD SECTION · 2:1

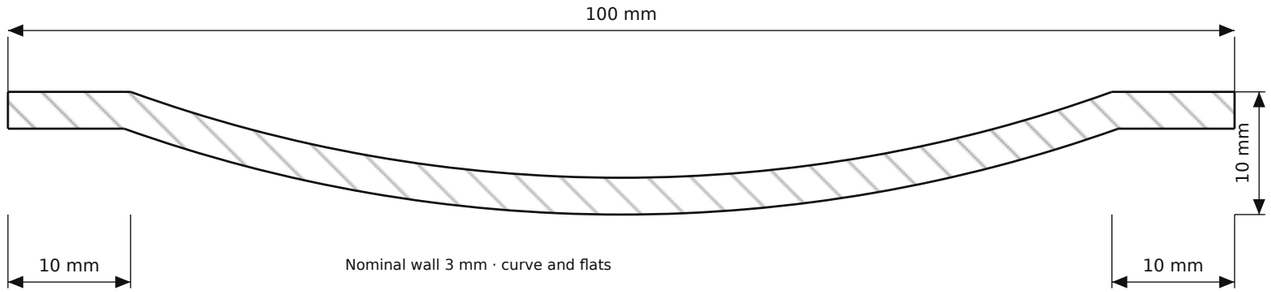

Circular profile · calculated radii

FRONT MARKING · 1:2

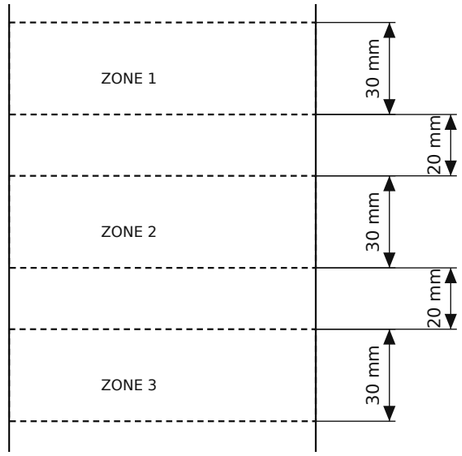

Z950 mm to Z820 mm

Content set by the contracting authority.

REAR MARKING · 1:2

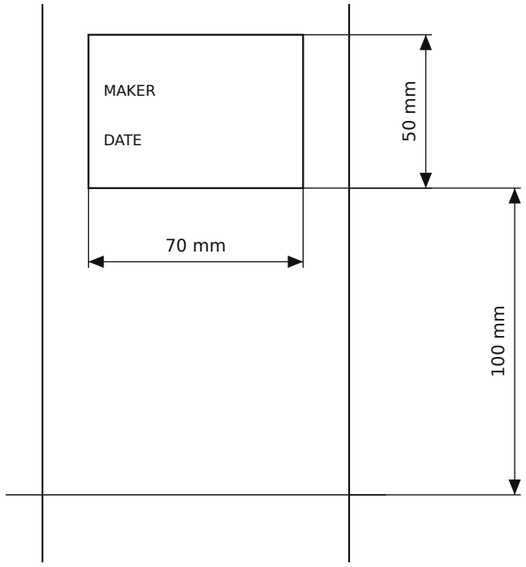

Burial datum Z500 mm

MARKING AND GEOMETRY NOTES

Front: 30 / 20 / 30 / 20 / 30 mm vertical chain; 100 mm below reflector.

Rear: 70 × 50 mm box, Z600–650 mm; 100 mm above the burial datum.

Markings reserve surface areas only; no material is added or removed.

Authority identification; manufacturer name and manufacturing date.

Nominal 1300 / 800 / 500 mm; all dimensions mm.

TRAFFIC INDUSTRIES

MiR GROUP
ENGINEERING MANUFACTURING INDUSTRY CONSTRUCTION TRADE

+90 532 711 2185
info@trafficindustries.com
trafficindustries.com
mirgrp.com

Macun Mah. Batı Bulvarı
ATB İş Merkezi No.192
06105 Yenimahalle · Ankara · Türkiye

GRP roadside flexible delineator post

DOC:	REV:	SCALE:	PAGE:
TI-YKD-1300-YELLOW-RW	C01 / CAD-R2	as shown	2/2
DATE:	**UNIT:**	**PAPER:**	**LANG:**
2026-10-03	mm	A3 / 420 x 297 mm	EN