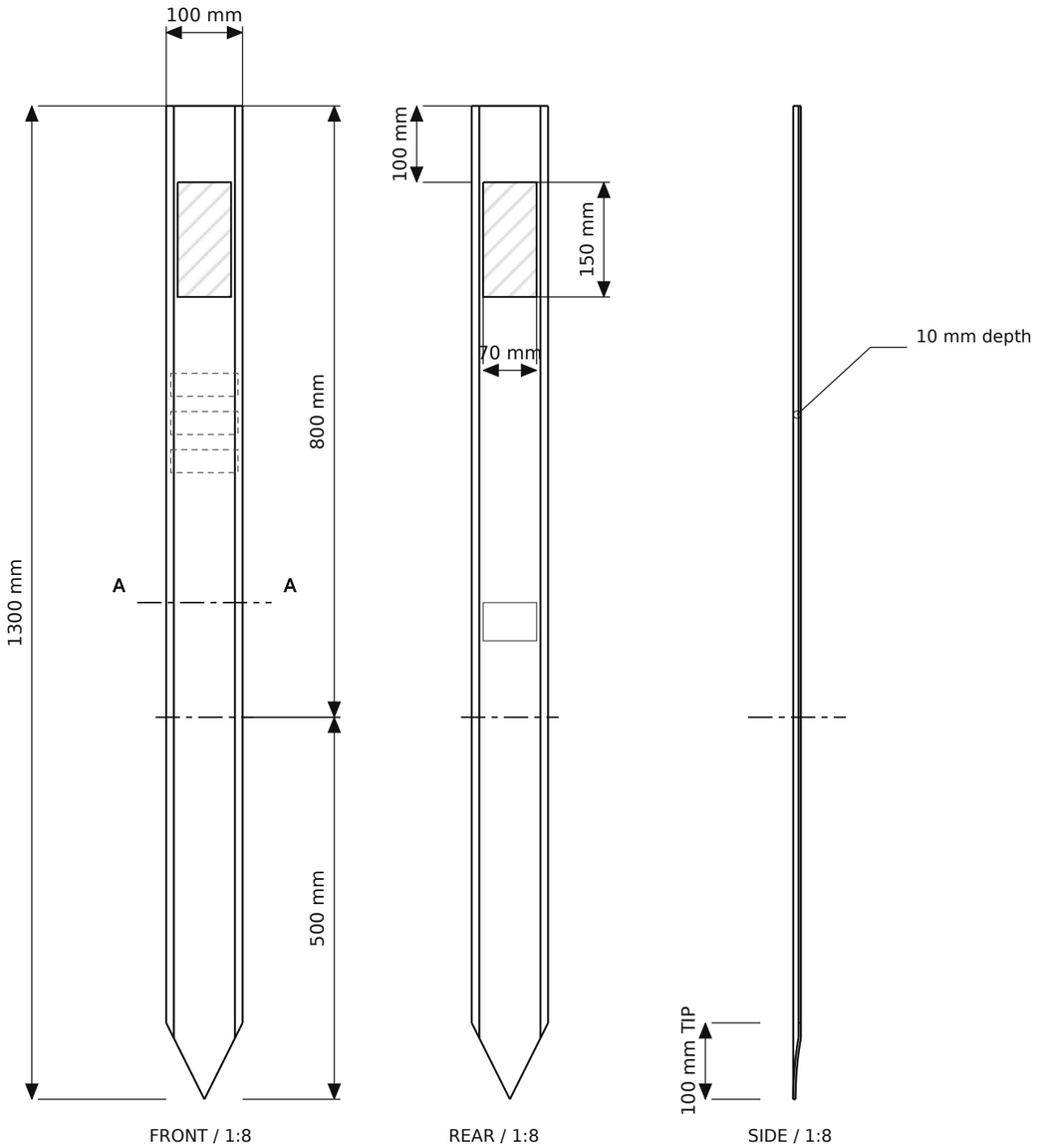

A-A / CAD SECTION / 2:1

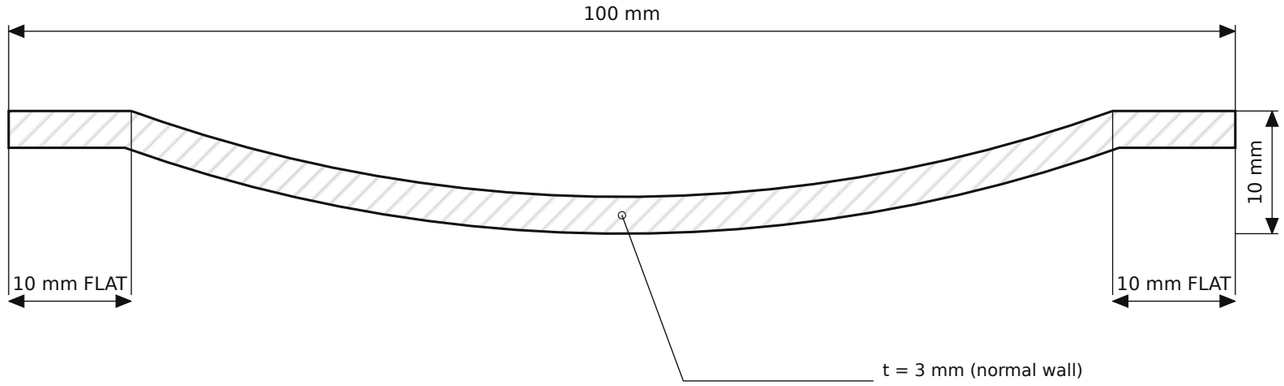

PRODUCT DIMENSIONS

Total 1300 = exposed 800 + embedded 500 mm

Section 100 x 10 mm; arc and flat wall 3 mm

Two 10 mm flat edges on the concave face

Pointed tip height 100 mm; flat upper edge

Front / rear reflector 70 x 150 mm; top margin 100 mm

Reflector side margins 15 mm; one per face

BODY: WHITE

REFLECTORS: front red / back white

PRODUCT DETAILS

Material: GRP.

Colour variants share one contour; front concave, rear convex.

TRAFFIC INDUSTRIES
MiR GROUP
ENGINEERING MANUFACTURING INDUSTRY CONSTRUCTION TRADE

+90 532 711 2185
info@trafficindustries.com
trafficindustries.com
mirgrp.com

Macun Mah. Batı Bulvarı
ATB İş Merkezi No.192
06105 Yenimahalle · Ankara · Türkiye

GRP roadside flexible delineator post

DOC:	REV:	SCALE:	PAGE:
TI-YKD-1300-WHITE-RW	C01 / CAD-R2	1:8 / 2:1	1/2
DATE:	**UNIT:**	**PAPER:**	**LANG:**
2026-10-03	mm	A3 / 420 x 297 mm	EN