D1 / PPC speed bump / Main module and native sections

R02 / Units mm / 2026-10-04

TOP / CAD raster / 1:2.381

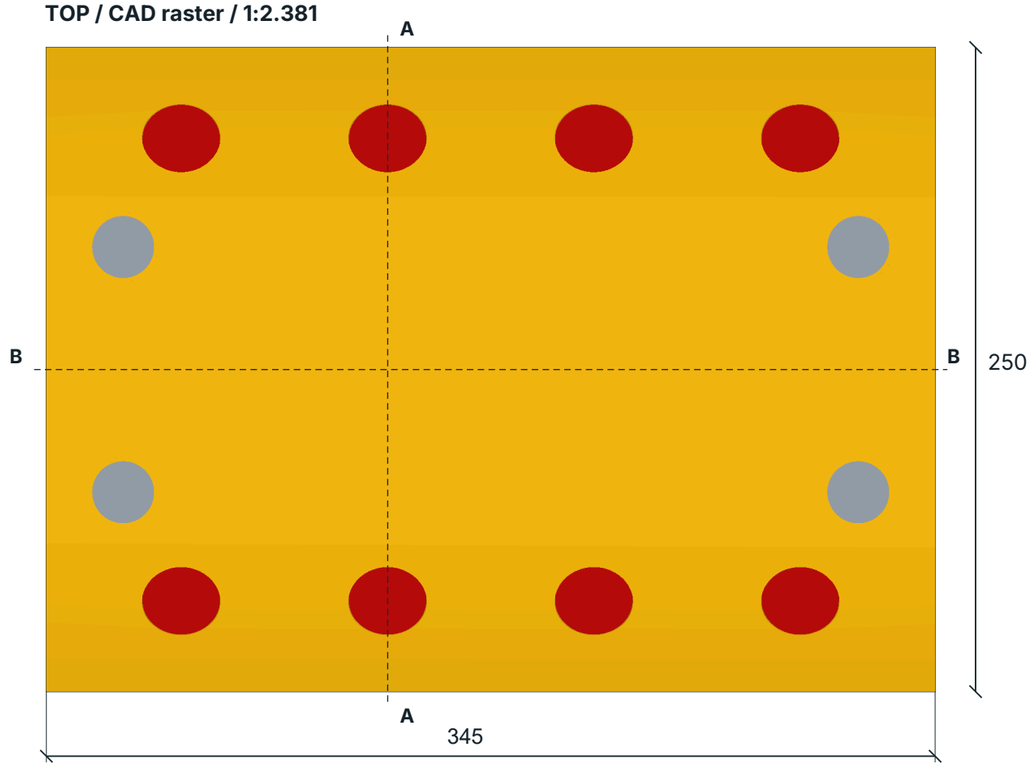

ISO / CAD raster / 1:3.125

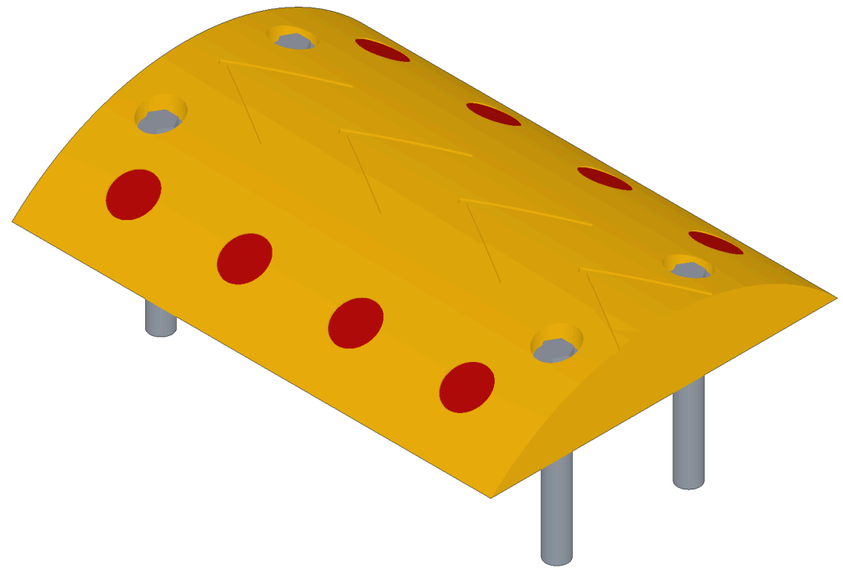

A-A / x132.5 / vector / 1:1.852

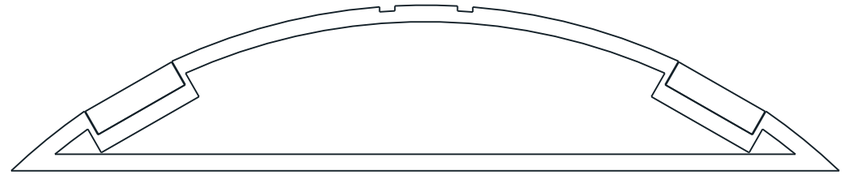

B-B / y0 / vector / 1:2.083

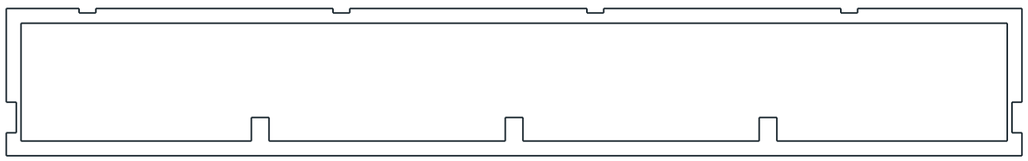

8 red passive lenses / diameter30 / pitch80

Pocket30.4 / bore11 / recess27 / seatZ33

CrownR181.25 / shell, ribs, groove geometry

Normal crown wall5; groove-local wall3.5

TRAFFIC INDUSTRIES
MiR GROUP
ENGINEERING MANUFACTURING INDUSTRY CONSTRUCTION TRADE

+90 532 711 2185
info@trafficindustries.com
trafficindustries.com
mirgrp.com

Macun Mah. Batı Bulvarı
ATB İş Merkezi No.192
06105 Yenimahalle · Ankara · Türkiye

TI-D1-PPC345-PARAM

DOCUMENT	REV	SCALE	PAGE
TI-D1-PPC345-PARAM	R02	At view	1/3
DATE	UNIT	PAPER	LANG
2026-10-04	mm	A3 / 420x297	EN

D1 / PPC speed bump / End cap and fixing interfaces

R02 / Units mm / 2026-10-04

TOP / CAD raster / 1:1.818

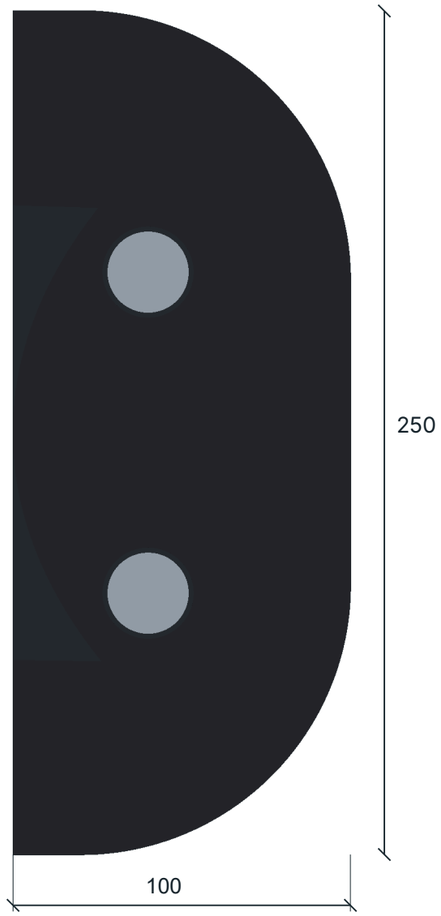

ISO / CAD raster / 1:1.818

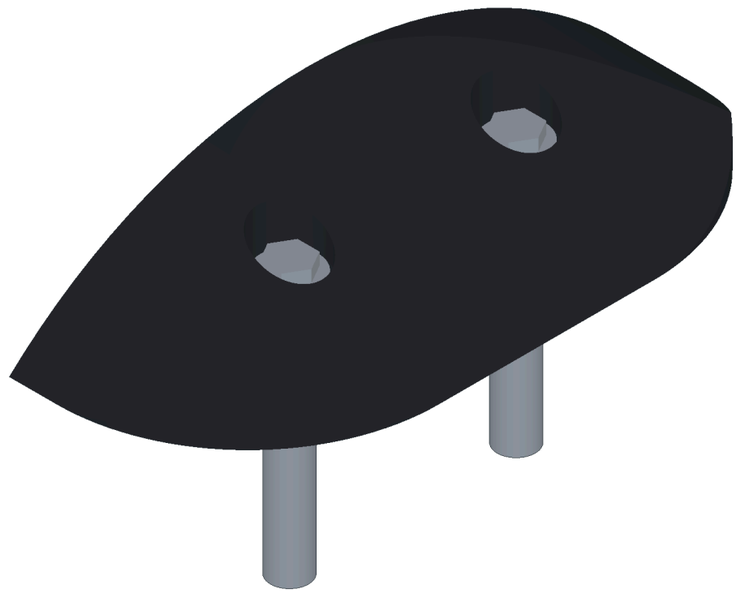

D-D / main x30 / vector / 1:1.613

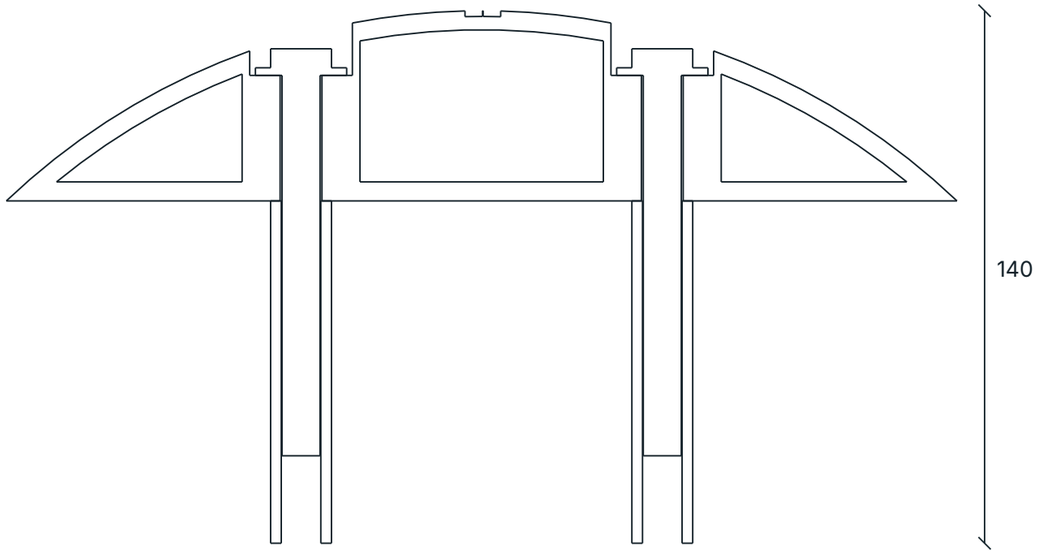

C-C / cap y0 / vector / 1:1.176

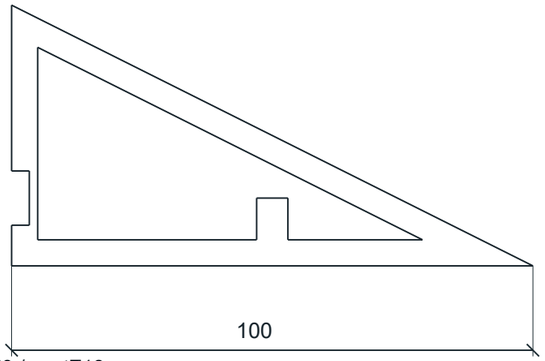

Cap surface50 / seatZ18

Main seatZ33 / cap seatZ18

Screw10x100; flange24x2 / hex16AF

Plug16x90 / bore10.4

2 cap fixings and4 main fixings; actual section geometry above.

Sloped rounded cap noseR80

Nominal fixing witnesses; helical thread and substrate not modeled.

Below-datum extent90 / surface50 / full hardware envelope140.

TRAFFIC INDUSTRIES

MiR GROUP
ENGINEERING MANUFACTURING INDUSTRY CONSTRUCTION TRADE

+90 532 711 2185
info@trafficindustries.com
trafficindustries.com
mirgrp.com

Macun Mah. Batı Bulvarı
ATB İş Merkezi No.192
06105 Yenimahalle · Ankara · Türkiye

TI-D1-PPC345-PARAM

DOCUMENT	REV	SCALE	PAGE
TI-D1-PPC345-PARAM	R02	At view	2/3
DATE	**UNIT**	**PAPER**	**LANG**
2026-10-04	mm	A3 / 420x297	EN

D1 / PPC speed bump / Actual8+2 assembly, joint and BOM

R02 / Units mm / 2026-10-04

TOP / CAD raster / 1:8.197

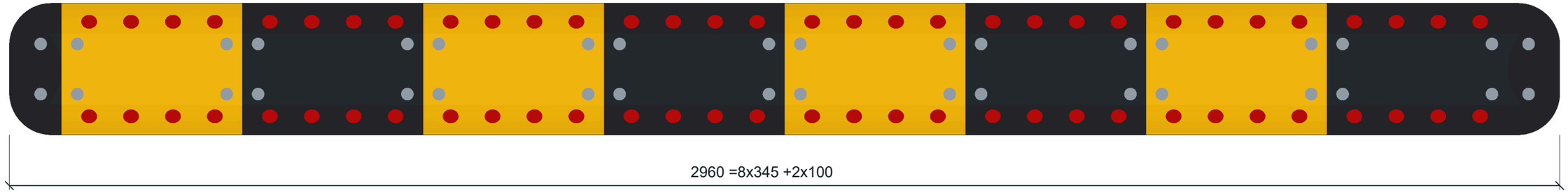

FRONT / CAD raster / 1:8.197

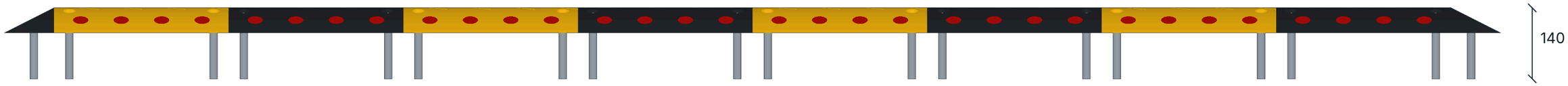

BOM / frozen155 physical closed solids

8 main bodies +2 black caps =10 PPC bodies

64 red passive lenses /8 per main module

36 nominal screws +36 plug witnesses

9 hidden keys /6x20x10 each

Order: black cap /Y-B-Y-B-Y-B-Y-B /black cap

Body travel250; surface50; fixing below datum90

E-E / y0 / joint x445 / vector / 1:0.667

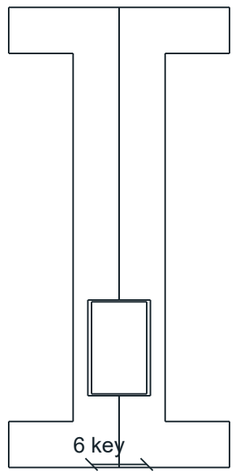

Actual joint at x445

Socket3.4 each side

Key3 per side /0.2 gap

CAD clip: x433..457 / y-25..25 / z-5..55

TRAFFIC INDUSTRIES
MiR GROUP
ENGINEERING MANUFACTURING INDUSTRY CONSTRUCTION TRADE

+90 532 711 2185
info@trafficindustries.com
trafficindustries.com
mirgrp.com

Macun Mah. Batı Bulvarı
ATB İş Merkezi No.192
06105 Yenimahalle · Ankara · Türkiye

TI-D1-PPC345-PARAM

DOCUMENT	REV	SCALE	PAGE
TI-D1-PPC345-PARAM	R02	At view	3/3
DATE	UNIT	PAPER	LANG
2026-10-04	mm	A3 / 420x297	EN